Shipping Explosives

An FMS Customer Guide

DISAM Defense Institute of Security Assistance Management

PREFACE

These sample documents incorporate the most current information available to the Defense Institute of Security Assistance Management (DISAM) regarding the application by foreign partners for a Competent Authority Approval (CAA) from the U.S. Department of Transportation to import explosives into the United States.

Although the samples were developed for the fictitious country of Bandaria, they are based on actual documents and, where possible, created in the actual computer systems.

Readers should be aware that this is an academic document. It does not set policy, precedent or procedures; it merely describes them as an aid to understanding. The source materials can and do change, often in significant ways, soon after this package goes to print.

Acknowledgements

This document is a collaborative effort of many individuals representing several organizations. DISAM wishes to thank the following participants for their contribution: Diana Altoft and Rick Vogt, NAVAIR Transportation; Michael Cutter, Air Force Safety Center; Tammy Dresbach, AFSAC; Todd Hughes, DSCA; Bryan Hursman, US Army Aviation & Missile Command Safety Office; George Verghis, NAVSUP-WSS-OF; Ed Walseman, Naval Ordnance Safety and Security Activity.

Questions, suggestions and corrections to this publication are welcome. Submit inquiries to Dr. Joanne Hawkins at joanne.hawkins@disam.dsca.mil.

November 2012

AN FMS CUSTOMER GUIDE TO SHIPPING EXPLOSIVES

Introduction

This publication is for information purposes only and is not a directive. It contains information on the requirements for shipping explosives in and out of the United States, and the documents needed to submit an application for a Competent Authority Approval (CAA) of a country-specific EX-number from the US Department of Transportation (USDOT). This publication contains sample documents for the FMS customer to use as a guide in preparing the CAA application. These sample documents incorporate the most current information available to the Defense Institute of Security Assistance Management (DISAM) regarding the application by foreign partners for a country-specific EX-number from the USDOT to import explosives into the United States.

Although the samples were developed for the fictitious country of Bandaria, they are based on actual documents and, where possible, created in the actual computer systems.

Readers should be aware that this is an academic document. It does not set policy, precedent or procedures; it merely describes them as an aid to understanding. The source materials can and do change, often in significant ways, soon after this package goes to print.

General Information

Dangerous Goods Shipments

FMS customers frequently purchase material through the DOD which are deemed hazardous by *United States Code of Federal Regulations* (CFR). The US Department of Transportation (USDOT) publishes US Hazardous Material (HAZMAT) regulations under Title 49, Sections 100-199 of the *Code of Federal Regulations* (49 CFR 100-199). The USDOT strictly regulates the movement of such material. The USDOT defines dangerous goods (hazardous material) as those materials which are capable of posing an unreasonable risk to health, safety and property when transported in commerce. One of the most dangerous of these hazardous materials are explosives.

In addition to having to conform to the requirements of 49 CFR, hazardous material shipments must be certified to the *International Maritime Dangerous Goods Code* (IMDGC) if the material is being transported by ship, to the International Air Transport Association (IATA*) Dangerous Goods Regulations* or International Civil Aviation Organization (ICAO) *Technical Instructions For The Safe Transport of Dangerous Goods by Air* if being transported by either commercial cargo aircraft or passenger aircraft, or to the US Air Force Joint Manual 24-204, *Preparing Hazardous Materials* for *Military Air Shipments*, if being transported by military aircraft.

Sensitive Shipments

The term "sensitive" has two different meanings, but both definitions impact the movement of material deemed "sensitive." In the context of security, "sensitive" is a special term that describes conventional weapons, ammunition, and explosives requiring special protection and security to keep them out of the hands of criminals and terrorists. Criminals and terrorists find conventional sensitive arms, ammunition, and explosives (AA&E) desirable because they are deadly, portable, and highly pilferable if unprotected. Conventional AA&E are munitions that are not nuclear, biological, or chemical (NBC) munitions. NBC items are covered by their own regulations. The DOD applies special security controls to sensitive AA&E. Sensitive material will always be moved via the Defense Transportation System (DTS) under Delivery Term Codes (DTC) 7, 8 or 9. Sensitive AA&E fall into four Security Risk Categories (SRC) based on degree of sensitivity and danger. These are discussed in detail in DOD 5105.38-M, *The Security Assistance Management Manual (SAMM)*, chapter 7. SRC I material must be transported to at least a customer country's port of debarkation (POD) under DOD control, unless waived by the Defense Security Cooperation Agency (DSCA). The applicable DTC on the LOA will be 9 or 7. SRC II through IV items must be shipped at least to a DOD ocean or aerial port where DOD personnel load it into a customer country's ship or aircraft. The LOAs for these items must be written with a DTC with no less than 8.

The second definition of the term "sensitive" applies in the context of hazardous materials, specifically explosives. "Sensitive" in this context indicates the ease of initiation of fire or explosion within the package and the extent of the damage it causes. Hazardous material regulations categorize explosives based on their volatility or ease of detonation.

A CIIC is assigned to every piece of material in the DOD inventory which has a national stock number. This CIIC is a combination of the security risk category and the hazardous classification of the material. The CIIC is used to determine the shipping procedures required to move the material to the FMS customer.

Not all AA&E items are sensitive. That means they do not require special security. Non-sensitive AA&E, if it contains explosives, is governed by HAZMAT regulations. Just because an item is hazardous does not make it sensitive AA&E, or vice-versa. Hazardous and non-sensitive items may be shipped through commercial channels under DTC 4 or 5.

Though not all sensitive items are hazardous, they do still require special security. Sensitive items that are not AA&E include night vision devices, cryptographic equipment, and communications security (COMSEC) equipment.

Arms, Ammunition, and Explosives

The United Nations' (U.N.) hazard classification system for identifying explosive materials and explosive components is recognized internationally and is used universally by the DOD and the USDOT. The U.N. system consists of nine classes of dangerous materials, with explosives designated as Class 1. The explosives hazard class is further subdivided into six divisions, which are used for segregating ammunition and explosives on the basis of similarity of

characteristics, properties, and accident effects potential. Table 1 defines these explosive divisions and properties.

Ammunition and explosives are further assigned to compatibility groups which identify whether the explosives can be transported and stored together without significantly increasing either the probability of an incident or the magnitude of the effects of such an incident. The compatibility group determines the type of carrier than may be used to transport the material, such as a passenger aircraft, or a dedicated ammunition surface ship.

Table 1
Class 1 Explosives Hazard Class Definitions

Division 1.1	Substances and articles which have a mass explosion hazard.
Division 1.2	Substances and articles having a projection hazard but not a mass explosion hazard.
Division 1.3	Substances and articles which have a fire hazard and either a minor blast hazard or a minor projection hazard or both, but not a mass explosion hazard.
Division 1.4	Substances and articles which present a minor explosion hazard. In the event of ignition or initiation during transport, the explosive effects are largely confined to the package and no projection of fragments of appreciable size or range is to be expected.
Division 1.5	Very insensitive substances which have a mass explosion hazard, but that have very little probability of initiation or of transition from burning to detonation under normal conditions of transport.
Division 1.6	Extremely insensitive articles which do not have a mass explosion hazard and which demonstrate a negligible probability of accidental initiation or propagation.

Transportation of Arms, Ammunition, and Explosives

The Defense Transportation Regulation (DTR) Chapter 205B2 prohibits the use of freight forwarders from moving sensitive material in hazard class 1.1 through 1.3. FMS freight forwarders may move hazard class 1.4 through 1.6 non-sensitive material, with appropriate local authority approvals. Alternatively, FMS freight forwarders may coordinate customer pickup at a DOD-controlled port, and process export paperwork, but are precluded from accepting or storing explosive material in their facilities. FMS freight forwarders have routinely moved non-sensitive small caliber ammunition, cartridge actuated devices (CADs), and propellant actuated devices (PADs) through their facilities (provided local safety ordnances permitted such material to be in the freight forwarder's possession). This practice has proven to be both cost-effective and efficient for the FMS purchaser.

Regardless of whether the explosive material moves through the DTS or commercial channels, movement of AA&E designated as hazardous material requires approval from a national agency responsible under a country's national law for the regulation of hazardous

materials transportation. For the United States, the "competent authority" (CA) is the USDOT. A CA approval (CAA) classification of explosives letter specifies hazard classification, proper shipping name, and other requirements for the item, and assigns an "explosive hazard" (EX) number. For AA&E controlled by the DOD, the DOT delegates this responsibility to specific DOD components. These organizations propose and submit final hazard classifications (FHC) via the DOD Explosives Safety Board (DDESB) for approval, through the Surface Deployment and Distribution Command (SDDC) to USDOT for issuing a Classification of Explosives approval. An interim hazard classification (IHC) is a mechanism used by DOD to allow for the transportation of Class 1 material in the US when the item's final hazard classification process has not been completed. It is a memorandum, signed by authorized personnel within the Army, Navy, and Air Force, describing the item and giving it a temporary hazard classification.

The Joint Hazard Classification System (JHCS) is the official DOD database of final hazard classification data for the military services' ammunition and explosives. It is maintained by the US Army Technical Center for Explosives Safety (USATCES). Explosive items are evaluated and tri-service coordinated between hazard classifiers for the Army, Navy, and Air Force following procedures in Technical Bulletin (TB) 700-2/NAVSEAINST 8020.8B/TO 11A-1-47/DLAR 8220.1, *Department of Defense Ammunition and Explosives Hazard Classification System*. The DDESB publishes changes to hazard classification procedures. Approved items are added to the JHCS database after assignment of an EX number by the DOT and are published for use by authorized customers on a need-to-know basis.

When explosives are moved under an FMS agreement, the DOD's EX number can be used to move the explosives within and from CONUS, provided that the explosives are in the DOD's possession via the DTS. If the explosive product is new and no EX-number has been issued by DOT to DOD, the DOD may move the material using an Interim Hazard Classification (IHC). An IHC is issued by DOD for material that is pending assignment of an EX-number from DOT. If the DOD moves the explosive material to an overseas POD (DTC 9) or to the final destination (DTC 7), the DOD EX number/IHC is valid to transport the material to that location. The DOD EX number/IHC expires when the explosive material is physically transferred to the FMS customer. When the FMS purchaser elects to pick up material at a CONUS DOD-controlled port (DTC 8) using their own carrier, the DOD EX number is valid only while the material remains in U.S. territorial jurisdiction. The FMS purchaser may be required to use its own country Competent Authority approval to transport the material from CONUS to their own country.

Initial Purchase Shipment Requirements

<u>Customer Receipt in CONUS-DTC 4 or 5</u>

If the FMS purchaser elects to pick up material at the point of origin (DTC 4) using their own arranged transportation, or if the FMS customer employs a freight forwarder to arrange

commercial transportation through a commercial port (DTC 5), the FMS customer must have a country-specific EX number issued by the USDOT to the FMS purchaser's CA to allow the explosive material to move within and from CONUS after the physical transfer of custody from the DOD to the purchaser or the purchaser's freight forwarder. Once explosive material is physically transferred to the FMS purchaser, the purchaser must have a country-specific EX-number issued by USDOT to move explosives back to and within CONUS, and any third-country CAAs through which the explosive material must transit.

Customer Receipt in CONUS-DTC 8

If the FMS purchaser elects to pick up material at a DOD-controlled air or water port (DTC 8) using their own arranged transportation, the DOT EX-number or IHC may be used to load the explosive cargo on board the FMS customer's carrier and depart the United States. Once explosive material is physically transferred to the FMS purchaser, the DOT EX-number/IHC expires and may not be used again. FMS customers may be required to obtain their own shipment approval from their own CA, or from other country CAs, if the shipment will transit through other countries prior to its arrival at the final destination.

Return Shipment Requirements

When an FMS customer needs to import AA&E into the US (for repair and return, testing, training exercises at a US installation, etc.), hazard classification documentation for the AA&E, regardless of origin, must come from the FMS customer's CA. If a DOD IHC approval, or a DOT-issued EX-number was originally used to export US origin AA&E, it cannot be reused for any subsequent transportation. The purchaser's national CA must apply for a country-specific EX-number from the USDOT before the material can be moved to, within or from the US. The purpose of the application from the FMS customer's national CA is to certify that the customer has not altered the content or packaging of the explosive material while it has been in its possession, and that it is compliant with U.N. safety standards.

The information required for the country-specific EX-number application depends upon whether the FMS customer has modified the explosive material or packaging since it was originally purchased from the United States. If the explosive material was originally purchased under a US national stock number (NSN), and a USDOT EX-number, and if neither the material nor its packaging have been altered in any way since the initial purchase, the FMS customer can apply for a country-specific EX-number with a letter of approval from a DOD hazardous materials safety office (see Table 2). The DOT/PHMSA may evaluate the application without any additional technical documents and issue a full EX-approval.

If, however, the explosive material or its packaging have been modified or altered since its initial purchase from the United States, the original NSN is no longer valid. In that situation, the FMS customer must apply for a new EX-number for the modified munitions. To obtain a country-specific EX-number from DOT, the FMS customer must provide technical documents

describing the explosive material and its packaging. This technical information must be provided to the DOD hazardous materials safety office, which must provide a written approval of the material and packaging before the application is submitted to DOT/PHMSA. The flowchart in Figure 1 shows the DOT process map for FMS EX approvals.

In both scenarios the FMS country-specific EX-number application must also include a copy of the LOA verifying the original purchase, a delegation of authority letter from the foreign CA (if applicable), a copy of the Joint Hazard Classification System (JHCS) printout identifying the explosive characteristics of the material, a copy of the classification of explosives letter issued to DOD for the initial export, and a US agent designation letter. Each of these documents is discussed in more detail in this guide.

FMS customers must initiate requests for country-specific EX numbers directly with the USDOT within 60 days of implementation of the LOA authorizing the return of explosive material to the US, and allow at least 120 days for the USDOT to issue the country-specific EX-number. FMS case managers should assist the FMS purchaser in obtaining this country-specific EX-number by providing supporting documentation unavailable to FMS the customer, such as the existing EX number, the JHCS record printout, and packaging documentation. FMS case managers may obtain assistance from:

Department of Defense

Department of Defense Explosives Safety Board (DDESB)
Hoffman Building 1, Room 856C
2461 Eisenhower Avenue
Alexandria, Virginia 22331-0600

Surface Deployment and Distribution Command (SDDC)

SDDC Safety Office
ATTN: AMSSD-SA
1 Soldier Way
Scott AFB, IL 62225

Figure 1
DOT Process Map

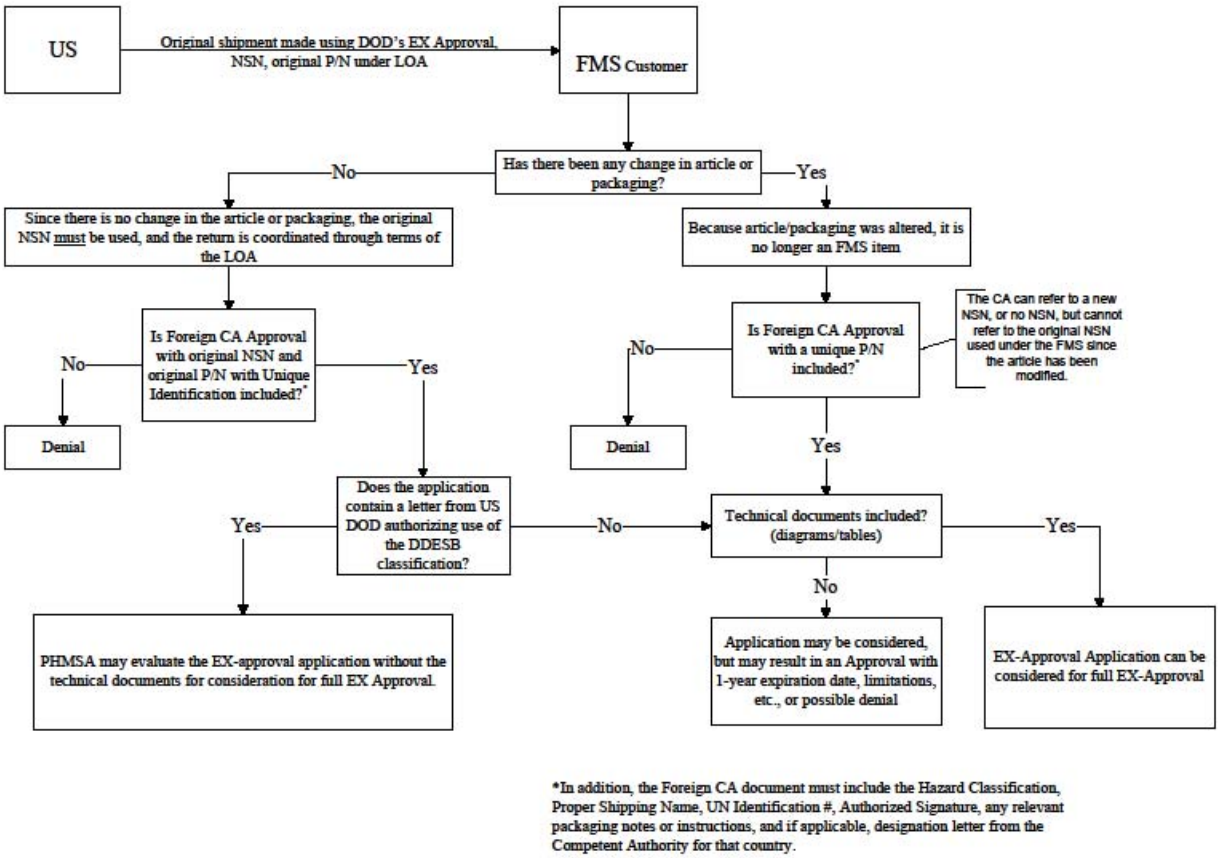

Movement of AA&E for FMS customers requires a transportation plan which should be coordinated with the customer as part of the FMS negotiation process. The transportation plan will be coordinated following the same procedure as for classified shipments. [See DOD 5100.76-M, *Physical Security of Sensitive Conventional Arms, Ammunition and Explosives*, Section C6.10.2.2 for more information.]

The Competent Authority Approval (CAA) Application for a USDOT Country-Specific EX-number

The CAA application package consists of seven documents. The following pages describe how each document is created or obtained, and its purpose. Examples of each document are shown at the end of this guide.

The Application package should consist of an application letter from the FMS customer's Competent Authority (CA). A list of foreign government competent authorities is available from the Department of Transportation's Pipeline and Hazardous Materials Safety Administration (PHMSA) at http://www.phmsa.dot.gov/hazmat. Select *International Standards* from the main menu, then enter *competent authority* in the advanced search field.

After the application letter, include the following:

Tab 1 - A copy of the LOA under which the explosive material was originally purchased. Include the signature page, the line description page(s), and the pages containing the notes applicable to the lines of the explosives. .

Tab 2 - A Confirmation of Classification Letter. This letter from a DOD explosives hazard classifying office authorizes the FMS customer to use the DOD assigned national stock number and country unique part number to obtain a country specific EX number from DOT.

Tab 3 - A copy of the Classification of Explosives (EX) letter issued to DOD by the US Department of Transportation, authorizing DOD to transport the explosive material in the original purchase.

Tab 4 - A copy of the Joint Hazard Classification System (JHCS) printout of the explosive/hazardous properties of the material being shipped. The FMS customer must obtain this document from the FMS case manager.

Tab 5 - The US Agent Designation Letter. This document identifies the freight forwarder, embassy representative or other customer agent located in the United States who may be contacted by the Department of Transportation to answer questions concerning this application package. Replace the red text with customer information.

Tab 6 - The Special Packaging Instruction (if applicable). This is a copy of the design and specifications which describe the characteristics of the container in which the hazardous/explosive material is being shipped. These instructions are required if the FMS customer proposes to move the explosive material in a container that is different from the original container through which it was purchased from the United States.

Tab 7 - A Delegation of Authority Letter (if applicable). This letter is required only if the FMS customer's CA is not qualified to certify the integrity of the military explosives. The delegation of authority assigns responsibility for HAZMAT certification to an alternate government entity. It identifies the FMS customer's point of contact for certifying packaging integrity, explosive classification, and transportation coordination for military HAZMAT.

The Application Letter from the FMS customer's Competent Authority (CA) for a Country-Specific EX-number

Purpose: The CA application letter initiates the application package. It identifies the specific explosive articles which the customer is requesting to return to the United States, and the reason for the return, such as repair, testing, overhaul, training or, calibration.

Originator: This document is created by the FMS customer's Competent Authority for certifying hazardous materials for that country.

Instructions:

1. The request letter should clearly identify the article for which an EX number is being sought, including nomenclature, NSN, part number, UN number, proper shipping name, and Hazard Class/Division as listed on its Competent Authority documentation. It may be the identification of the explosive article(s) that was used on the original purchase. The NSN will be the DOD-assigned stock number. The part number will be the DOD-assigned part number with the FMS customer's EX-number suffix. The suffix makes the part number unique to that specific FMS customer. FMS customer EX-number suffix codes are located in DOD 5105.38-M, *The Security Assistance Management Manual,* Table C4.T2.
    a. If the application is being made for a new delivery of explosive material on an initial purchase (DTC 4 or 5) (material that has not been in the FMS customer's possession), the letter should include a statement that this is an initial delivery.
    b. If the application is being made to return previously purchased explosive material to the United States (material that has been in the FMS customer's possession), The letter should include a statement that the explosive material has not been changed in any way since it was procured from the US initially, and that it has been stored and maintained in accordance with US-provided maintenance and storage procedures.
2. If the explosive material has been modified, provide detailed information on the extent of the modifications. The modification will require DOT to issue a new EX-number instead of permitting the use of the existing US EX-number.
3. Request full authorization for multiple shipments if this material will require periodic return to the US for maintenance, calibration, testing or other purposes. Do not indicate a performance period unless this CAA is required for a one-time shipment. If a shipping date or performance period is specified in the application letter, DOT/PHMSA will provide an approval with an expiration date. In the event that the performance period changes, the FMS customer will need to resubmit the CAA application to request an extension of the CAA.

Sample: A sample CA application letter is shown on pages 15 and 16. To use this sample as a template, replace the information in **red** with applicable information specific to the FMS customer's proposed shipment.

The Letter of Offer and Acceptance (LOA)-extract (Tab 1)

Purpose: The LOA serves as evidence that the explosive material is of US-origin, and that it was purchased through the FMS program.

Originator: The FMS customer provides copies of pages from his complete copy of the LOA. If this document has been lost or misplaced, a complete copy can be obtained from the FMS case manager.

Instructions: The copy provided should Include the first page of the LOA which shows the original case identifier, and the page of the LOA which lists the line under which the explosive material was originally purchased. If the original LOA included any line-specific notes that further identified the explosive material, provide a copy of the LOA note page.

Sample: A sample LOA is shown on pages 17 through 20.

The Confirmation of Classification Letter (Tab 2)

Purpose: This letter authorizes the FMS customer to use the DOD assigned national stock number and country unique part number to obtain a country specific EX number from DOT.

Originator: This document must be prepared by the recognized cognizant explosive hazard classifier of the military department that manages the explosive material being moved or returned by the FMS customer

Instructions: FMS customers may obtain this letter by following these procedures:

1. For FMS cases with the US Army, this document is obtained by the FMS customer from the US Army Hazardous Materials Safety Office.
2. For FMS cases with the US Navy, this document is created by the program office and submitted to the Naval Ordnance Safety and Security Activity on request by the FMS customer.
3. For FMS cases with the US Air Force, the FMS case manager at AFSAC will prepare the Classification of Explosive letter and forward to the Air Force Safety Center for review and signature.

Specific points of contact are listed in Table 2 on the next page.

Sample: A sample Confirmation of Classification Letter is shown on page 21.

Table 2
US Military Department Hazardous Materials Safety Offices

US Army	US Army Aviation and Missile command AMCOM Safety Office Missile System Safety Engineering Division Redstone Arsenal, AL 35898-5000 Ph: (256) 842-8628
US Navy	Commander Naval Ordnance Safety and Security Activity (NOSSA) Farragut Hall 3817 Strauss Avenue, Suite 108 Indian Head, MD 20640-5151 Ph: (301) 744-6021
US Air Force	Air Force Safety Center HQ AFSC/SEW 9700 G Avenue SE Bldg 24499 Kirtland AFB, NM 87117 Ph: (505) 846-1386

The Classification of Explosives (EX) Letter (Tab 3)

Purpose: This document is a copy of the Classification of Explosives (EX) letter issued to DOD by the US Department of Transportation, authorizing DOD to transport the explosive material in the original purchase.

Originator: This document must be provided by the explosive safety certification office of the military department that manages the explosive material being moved or returned by the FMS customer For FMS cases with the US Air Force, this document is obtained by the FMS case manager on request by the FMS customer. For FMS cases with the US Army, this document is obtained by the FMS customer from the AMCOM safety office. For FMS cases with the US Navy, this document is created by the program office and submitted to the Navy safety office.

Instructions: FMS customers must contact the respective certification office to obtain this letter. See points of contact in the previous section.

Sample: A sample Classification of Explosives (EX) Letter is shown on page 22.

The Joint Hazard Classification System (JHCS) Printout (Tab 4)

Purpose: The Joint Hazard Classification System (JHCS) printout shows the characteristics of the explosive/hazardous properties of the material being shipped. The FMS customer must obtain this document from the FMS case manager.

Originator: This document must be provided by the FMS case manager on request by the FMS customer.

Instructions: For FMS cases with the US Air Force, this document is obtained by the FMS case manager for the FMS customer. For FMS cases with the US Army, this document is obtained by the FMS customer from the AMCOM safety office. For FMS cases with the US Navy, this document is obtained from the Navy safety office.

The FMS case manager can access the JHCS at https://www3.dac.army.mil/esidb/login/. This is a secure site and requires registration.

Sample: A sample JHCS printout is shown on page 23.

The US Agent Designation Letter (Tab 5)

Purpose: This document identifies the freight forwarder, embassy representative or other customer agent located in the United States who may be contacted by the Department of Transportation to answer questions concerning this application package.

Originator: This document must be provided by the FMS customer.

Instructions: The DOT/PHMSA requires a customer point of contact in the United States to answer questions that may arise concerning the application for the country-specific EX-number. If using the sample as a template, replace the red text with customer information.

Sample: A sample US Agent Designation Letter is shown on page 24.

The US Special Packaging Instruction (Tab 6) (if applicable)

Purpose: This is a copy of the technical manual or technical order which describes the characteristics of the container in which the hazardous/explosive material is being shipped. If the explosive article has not been modified in any manner prior to being returned to the United States, and the same container is being used to return the explosive material back to the United States, then this document is not required.

If required, it assures DOT/PHMSA that the explosive material is being transported in a container suitable for protecting against initiation or ignition.

Originator: This document must be provided by the FMS customer.

Instructions:

1. If the container has been manufactured or modified since the initial sale, the FMS customer must provide drawings, blueprints, photographs or other evidence that the container is safe and appropriate for shipping the explosive material. Include the type of material used in the construction of the container

2. If the explosive article has been modified since the initial purchase:

a. The FMS customer must provide the product description of both the article and the packaging, highlighting those modifications made since the original configuration purchased through FMS, particularly those potentially affecting the explosive properties or the means of initiation or ignition.

b. Provide a copy of engineering diagrams or drawings specifically showing the physical arrangement of all explosive-containing sub-assemblies or assemblies that are parts of the modified article, to include illustrations of the article's physical packaging arrangement.

c. Provide a copy of a table supplementing the engineering diagrams by including the technical names, location callouts, and weights of all explosive compositions in the modified articles subassemblies and assemblies.

Sample: A sample special packaging instruction is shown on pages 25 through 29.

The Delegation of Authority Letter (Tab 7) (if applicable)

Purpose: This letter identifies the FMS customer's point of contact for certifying packaging integrity, explosive classification, and transportation coordination for military HAZMAT. It is only required if the CA has delegated their authority to another agency.

Originator: The FMS customer's Competent Authority prepares this document.

Instructions: If the FMS customer's Competent Authority does not have the expertise or evidence to verify that the explosive material is in its original packaging and that it has been stored and handled properly to maintain safety, then the CA may delegate this certification authority to the organization that has this evidence. The delegation of authority letter must identify the organization qualified to certify the explosive shipment. To use this sample as a template, replace the information in **red** with applicable information specific to the FMS customer's proposed shipment.

Sample: A sample Delegation of Authority Letter is shown on page 30.

How to Submit the CAA Application

Once all the necessary documents have been compiled, the application for a Competent Authority Approval (CAA) for a country-specific EX-number may be submitted by the FMS customer directly to the USDOT/PHMSA at the following address:

US Department of Transportation (DOT)
Pipeline and Hazardous Materials Safety Administration
Office of Hazardous Materials Safety
Office of Hazardous Materials Special Permits and Approvals
1200 New Jersey Avenue, SE

East Building, 2nd Floor, PHH-32
Washington, D.C. 20590

Alternatively, DOT/PHMSA accepts applications through its web site at https://hazmatonline.phmsa.dot.gov/Online%20Approvals/pages/welcome.aspx. The website provides immediate confirmation of receipt and a tracking number. It offers the capability to attach supporting documents and can be used to submit multiple applications. Sample screen entries are shown at Appendix A of this document.

Example of a Request for Competent Authority Approval (CAA)
(FMS customers should replace red text with applicable information)

Civil Aviation Authority of Bandaria
Karish Plaza 6
Peliar Zel BN-5838
Republic of Bandaria

Date

U.S. Department of Transportation
Pipeline Hazardous Materials Safety Administration
Office of Hazardous Materials Safety
Office of Hazardous Materials Special Permits and Approvals
1200 New Jersey Avenue, SE
East Building, 2nd Floor, PHH-32
Washington, DC 20590

To Whom It May Concern,

On behalf of the Government of Bandaria, I forward here explosive hazard classification information for filing as required by Title 49, US Code of Federal Regulations (CFR), Section 173.56(g). The Government of Bandaria has procured Humdinger missiles from the United States through the Foreign Military Sales (FMS) Program as evidenced by the Letter of Offer and Acceptance (LOA) (Tab 1). As the Competent Authority, or as so delegated (Tab 2) for the Government of Bandaria the following explosive item is approved for transportation within Bandaria and is assigned the following hazard classification (Tab 3):

Nomenclature/NSN P/N	Proper Shipping Name	HC/Div	UN#
Guided Missile, Royal Humdinger SL-HUM-120Z NSN 1410-00-999-9999 P/N 1234567-000-XXX[i]	Rockets	1.1E	UN0181

Packaging Note: (Provide description of container, e.g. steel container P/N 1234-56)
Special Packaging Instructing (SPI) AR-68/91

This is based on the DOD hazard classification assigned by the US Department of Transportation (DOT) as EX8807576H (Tab 4) and this classification is on record and stored in the Joint Hazard Classification System (JHCS) as Missile, Royal Humdinger, HUM-120Z, NSN 1410-01-999-9999. A copy of the DOD hazard classification database JHCS printout sheet is enclosed (Tab 5).

The Government of Bandaria has adopted the US Special Packaging Instructions (SPI) (Tab 6) for this missile and I certify the item has not been changed in any way since procurement from the United States and it has been maintained and stored in accordance with US provided maintenance and storage procedures.

The Government of Bandaria requests a DOT EX letter providing approval authority with packaging note be provided to this office to facilitate shipment of the missiles into, within, and out of the United States.

Example of a Request for Competent Authority Approval (CAA)
(FMS customers should replace red text with applicable information)

It is further requested that approval, when granted, extends to at least _____ years from the date it is approved by DOT. (Insert time desired, e.g. 10 years, or replace this text with "It is further requested that the approval, when granted, not be time limited.")

This request is submitted by: Your name, telephone number, e-mail address, and organizational address. Our agent for service in the United States is name, telephone number, e-mail address, and organizational address. As evident in our US Agent Designation Letter (Tab 7)

Sincerely,

{signature required}

Attachments:

Tab 1	Letter of Offer and Acceptance
Tab 2	Confirmation of Classification Letter
Tab 3	EX Letter issued to DOD
Tab 4	JHCS Record Printout Sheet
Tab 5	US Agent Designation Letter
Tab 6	US Special Packaging Instruction (as required)
Tab 7	Delegation of Authority Letter (as required)

[i] XXX represents the country-specific EX-number suffix listed in SAMM C4.T2 for DOT purposes.

United States of America
Letter of Offer and Acceptance (LOA)

BN-D-YCY
ROYAL HUMDINGER II

Based on (DISAM) Government of Bandaria (GOB) letter dated (continued on page 2)

Pursuant to the Arms Export Control Act, the Government of the United States (USG) offers to sell to the Embassy of Bandaria, Office of the Air Attache, 2468 16th Street NW, Washington, DC 20009-2468, the defense articles or defense services (which may include defense design and construction services) collectively referred to as "items," set forth herein, subject to the provisions, terms, and conditions in this LOA.

This LOA is for 94 SL-HUM-120Z Humdinger Missiles, including SL-LAU-HUM-999A/A missile launchers, containers, two years initial spare parts, support (continued on page 2)

Estimated Cost: $104,224,392 Initial Deposit: $2,613,552

Terms of Sale:

Cash Prior to Delivery

Dependable Undertaking

Congressional Notification: 10-99

This offer expires on 30 September 2010. Unless a request for extension is made by the Purchaser and granted by the USG, the offer will terminate on the expiration date.

This LOA consists of page 1 through page 28.

The undersigned are authorized representatives of their Governments and hereby offer and accept, respectively, this LOA:

	13 Aug 2010		28 Sep 2010
US Signature	Date	Purchaser Signature	Date
CANCY Z. BUDDSON			
Typed Name and Title		Typed Name and Title	
COMMANDER, 555th INT'L GROUP (AFSAC)			
Implementing Agency		Agency	

DSCA Reviewed/Approved 13 Aug 2010

DSCA Date

Information to be provided by the Purchaser:
Mark For Code_(A)_, Freight Forwarder Code_(2)_, Purchaser Procuring Agency Code_B_, Name and Address of the Purchaser's Paying Office: Embassy of Bandaria, Office of Finance _____ & Procurement, 2468 16th Street NW, Washington DC 20009-2468_____

Tab 1

Customer reference continued: 14 May 2010 and MOD of the Republic of Bandaria and U.S. DOD MOU dated 6 October 2008.

Case description continued: equipment, technical publications, contractor technical services, warranty services, training and unique USG services.

Items to be Supplied (costs and months for delivery are estimates):

(1) Itm Nbr	(2) Description/Condition		(3) Qty, Unit of Issue	(4) Costs (a) Unit	(b) Total	(5) SC/MOS/ TA	(6) Ofr Rel Cde	(7) Del Trm Cde
001 D3 47	B1Z 144001HUM120Z MISSILE, SURFACE LAUNCH, HUMDINGER, SL-HUM-120Z (DISAM) SL-HUM-120Z Humdinger Surface Launched, Ground to Air, Medium Range Missile (Note(s) 1, 19, 20, 21, 23, 35)	(Y)(M)(E) (IV)	94 EA	$837,055.00	$78,683,170	P(1-60) TA5	X	7
002 D3 47	B1Z 1440SLHUMLAUZ LAUNCHER, HUMDINGER SL-HUM-LAU-999A/A (DISAM) Humdinger Surface to Air Launcher, SL-HUM-LAU-999A/A (Note(s) 2, 21, 31, 35)	(Y)(M)(R) (IV)	16 EA	$38,706.23	$619,300	P(1-36) TA5	X	7
003 D3 47	B1Z 692001CTM120Z MISSILE, HUMDINGER, TRAINING, SL-CATM-120Z (DISAM) Humdinger Training Missile, CATM-120Z (Note(s) 3, 21, 35)	(S)(M)(E) (IV)	10 EA	$48,884.00	$488,840	P(1-48) TA5	X	7

(1) Itm Nbr	(2) Description/Condition		(3) Qty, Unit of Issue	(4) Costs (a) Unit	(b) Total	(5) SC/MOS/ TA	(6) Ofr Rel Cde	(7) Del Trm Cde
004 C7 47	B1Z 1450HUM120CTN CONTAINER, SL-HUM-120Z, SURFACE LAUNCH (DISAM) Humdinger Missile Container, All Up Round (Note(s) 4, 21)	(N)(N)(R) (IV)	31 EA	$97,344.89	$3,017,692	P(1-60) TA5	X	7
005 C7 47	B1Z 9B1Z00HUMSUPT SUPPORT EQUIPMENT, SURFACE LAUNCH HUMDINGER (DISAM) Humdinger SL-HUM-120Z Support Equipment (Note(s) 5)	(N)(N)(R) (IV)	XX		$1,563,480	X(1-60) TA4	A	5
006 C7 47	B9A 9B9A00GMPARTS COMPONENT PARTS/SUPPORT EQUIPMENT Unclassified Components/Parts for Surface Launch Support Equipment. (Note(s) 6)	(N)(N)(R) (IV)	XX		$2,121,000	X(1-60) TA4	A/Z	5/8
007 D3 47	B1C 9B1C1N1TALSPT SUPPORT, CONTACTOR, SURFACE LAUNCH, HUMDINGER MISSILE (DISAM) Unclassified Humdinger Missile Section Spares (Note(s) 7, 35)	(N)(M)(R) (IV)	XX		$2,158,345	P(1-60) TA5	X	9
008 D3 47	B1C 141000HUMPART SPARE PARTS, SURFACE LAUNCH MISSILE, CLASSIFIED (DISAM) Classified Spare Parts, Guidance Section, SL-HUM-120Z (Note(s) 8, 35)	(N)(M)(R) (IV)	4 EA	$504,250.00	$2,017,000	P(1-60) TA5	X	9

from Government of Bandaria for BN-D-YCY". Wire transfer is preferred.

2. One signed copy should be returned to Department of the Air Force, Air Force Security Assistance, 555th IGP/CC, 1822 Van Patton Drive, Building 210, WPAFB, OH 45433-5337.

Note 1. LINE NOTE 001 - HUMDINGER SURFACE LAUNCHED MISSILES, SL-HUM-120Z.

This line provides for ninety-four (94) each SL-HUM-120Z surface launched missiles configured as tactical Humdinger Air Vehicles (AAV) also referred to as All-Up Rounds (AUR). Requirements for missiles for Bandaria will be produced in Bandaria in accordance with the co-production MOU between the Government of Bandaria and the U.S. Government. A delivery schedule is provided separately. The missiles contain classified and explosive materials and will be shipped through the Defense Transportation System (DTS), Freight Forwarder (as appropriate) or country-arranged transportation methods in accordance with current directives. Transportation of the missiles, if required, will be done to a CONUS DOD controlled port for a Special Assignment Airlift Mission (SAAM) flight. SAAM costs, including over-ocean movement will be paid from a line on this case. The transportation plan must be coordinated and approved by Air Force Material Command (AFMC) Security Department prior to delivery of the weapon system to the Purchaser.

NSN: 1410-00-999-9999
NOUN: Humdinger Missile, SL-HUM-120Z
Exp. Class: Inside 1.2.1E
Qty: 94 EA
P (25-60)

Note 2. LINE NOTE 002 - SURFACE MISSILE LAUNCHERS.

This line provides for sixteen (16) SL-HUM-LAU-999A/A launchers. This line also includes the cost of the Advance Missile Remote Interface Unit and the launcher adapters required for surface launch capability.

NSN: 1410-00-999-1111
NOUN: Launcher, SL-HUM-LAU-999A/A
Exp. Class: None
Qty: 16 EA
P (25-36)

Note 3. LINE NOTE 003 - TRAINING MISSILES.

This line provides for ten (10)training missiles, SL-HUM-TNG-120Z. These are blunt-nose training missiles. The design will be the same as developed for the USAF. The training missiles will be shipped in CNU-431/E Blunt Nose USAF designed shipping and storage containers. A delivery schedule will be provided separately.

NSN: 1410-00-999-8888
NOUN: Missile Training, SL-HUM-TNG-120Z
Exp. Class: None
Qty: 10 EA
P (25-48)

Note 4. LINE NOTE 004 - MISSILE CONTAINERS, TACTICAL AND TRAINING.

This line provides for thirty-one (31) containers: twenty-four (24) SL HUM-120Z AUR (CNU-431/E), four (4) spare containers, and three (3) HUM-T (CNU-431(V)1/E). The missile containers are all-up-round (AUR) containers with each container accommodating from one to four tactical; or one to four training missiles. However, the training container cushions are shaped to accept the blunt-nosed shape of the training missiles and cannot be used for the tactical missiles. Section containers are included to support shipment and storage of the required sections. Each section container accommodates one missile section. The containers will be provided to the missile manufacturer prior to delivery need dates. The missiles and training missiles will be shipped from the manufacturers' plants to Bandaria in these containers. These containers are reusable for storage and shipment.

From: Commanding Officer, Naval Ordnance Safety and Security Activity

To: U.S. Department of Transportation, Pipeline and Hazardous Materials Safety Administration, Office of Hazardous Materials Safety, Office of Hazardous Materials Special Permits and Approvals (PHH-32), 1200 New Jersey Avenue, S.E., East Building, 2nd Floor, PHH-32, Washington, DC 20590-0001

Subj: CONFIRMATION OF CLASSIFICATION FOR NSN 1410-00-999-9999, MISSILE, ROYAL HUMDINGER, SL-HUM-120Z

Ref: (a) DoD 5105.38-M, Security Assistance Management Manual, C7.18.2.1.1(E).

1. As the recognized cognizant explosives hazard classifier for Navy managed assets, this office authorizes the Government of Bandaria to utilize the Department of Defense (DOD) assigned NSN 1410-00-999-9999 along with their country unique part number, 1234567-000-XXX[1], for their application to obtain a DOT EX number for Foreign Military Sales cases. At the time of purchase from the DOD, the hazard classification of this item was 1.1E, UN0181.

2. The country unique part number was assigned in agreement with the United States in accordance with reference (a). It identifies the country of ownership for this item and enables the assignment of a DOT EX number to allow transportation within the United States.

3. For further information or assistance regarding this action, please contact Mr. Ed Walseman, (301) 744-6021, or email: ed.walseman@navy.mil

[1] XXX represents the country-specific EX-number suffix found in SAMM Table C4.T2

Tab 2

U.S. Department of Transportation
Research and Special Programs Administration

400 Seventh Street, S.W.
Washington, D.C. 20590

The US Department of Transportation
Competent Authority for the United States

CLASSIFICATION OF EXPLOSIVES

Based upon a request by W. Richard Wright on behalf of U.S. Department of the Army, 5611 Columbia Pike, MTOP-OPS, Falls Church, Virginia, the following items are classed in accordance with Section 173.56, Title 49, Code of Federal Regulations (49 CFR). These items are authorized for transportation only when transported by, or under the direction or supervision of, a component of the Department of Defense.

U.N. PROPER SHIPPING NAME AND NUMBER: Rockets, UN0181

U.N. CLASSIFICATION CODE: 1.1E

REFERENCE NUMBER	PRODUCT DESIGNATION/PART NUMBER
EX-8807576H	Guided Missile, Royal Humdinger HUM-120Z NSN: 1410-00-999-9999

Approved by:

Alan I. Roberts
Associate Administrator
for Hazardous Materials Safety

JAN -5 1998
(DATE)

cc: Mr. William P. Yutmeyer, US Army Technical Center for Explosive Safety
Mr. Ray B. Sawyer, DDESB

Tab 3

JHCS LINKS	JHCS MAIN MENU	JHCS DATA ELEMENTS	ESMAM	SENSITIVITY GROUPS
	JHCS CUSTOM QUERY	COMPATIBILITY GROUPS	USATCES	LOG OUT

Record 1 of 1	JHCS Data Item Detail			
JHCS ID NO: 24377	NSN:	1410-00-999-9999 Click for Unit Load Data (CAPULDI)	DODIC:	PV67 Click for CAPULDI

Nomenclature:	MISSILE, ROYAL HUMDINGER
Proper Shipping Name:	ROCKETS
Technical Name:	
(Change) DOT Reference Number:	EX1988070576H
DOT Letter	1998JAN05B
(Change) Proper Shipping Description:	UN0181, ROCKETS, 1.1E, PG II
Old Proper Shipping Description: (May be used until Jan 01, 2013)	ROCKETS, 1.1E, UN0181, PG II

Inhabited Building Distance:	(04)	Shipping Label 1:	EXPLOSIVE 1.1E	Primary Hazard 1.1E
DOD Hazard Class/Division:	1.1	Shipping Label 2:		
Compatibility Group:	E	Shipping Label 3:		
UN Number:	0181	Part/Dwg1	1234567-000	
DOD Component:	NAVY	Part/Dwg2		
TRI-Service Coordination:	NO, NOT NEW ITEM	Part/Dwg3		

WEIGHT	POUNDS	KILOGRAMS	TYPE OF WEIGHT
Net Explosive Weight (NEW)	67.700000	30.708204	Transportation Qty
Net Explosive QD Weight (NEWQD)	37.700000	17.100433	Storage Quantity

Sensitivity Group Code	SG3

The FMS customer may obtain this document from the FMS case manager.

Tab 4

Civil Aviation Authority of Bandaria
Karish Plaza 6
Peliar Zel BN-5838
Republic of Bandaria

(Date of Letter)

U.S. Department of Transportation
Pipeline Hazardous Materials Safety Administration
Office of Hazardous Materials Special Permits and Approvals
ATTN: PHH-30
East Building
1200 New Jersey Avenue, SE
Washington, DC 20590-0001

Chief, Office of Approval,

(Organization Name, Address, email address, telephone number, fax number) is filing this designation of agent for service, in accordance with 49 CFR §105.40. The U.S. based agent of service listed below will represent us on matters concerning explosive approval requests submitted to the U.S. Department of Transportation.

Name of Designated Person
Title
Name of Agent Organization
Address
Email
Phone Number
Fax Number

This designation is legal and binding under our corporate laws and will remain in effect until it is withdrawn or replaced by us. By the dated signatures below, (Organization Name) accepts this designation of agent and (Agent Organization Name) accepts the agent's responsibilities.

(Organization Name) will provide any additional information requested.

PRINCIPAL
Printed: (John Doe / Title) Signed: _____ Date: _____
Company/Organization: (Organization Name)

AGENT
Printed: (John Smith / Title) Signed: _____ Date: _____
Company: (Agent Organization Name)

CAGE CODE
30003

DEPARTMENT OF THE NAVY
NAVAL AIR SYSTEMS COMMAND

AR-68/91A
ISSUE DATE: 14 OCT 97
PAGE 1 OF 5
SUPERSEDING AR-68/91
DATED 5 MAY 91

AIR REQUIREMENT, PACKING

Guided Missile, Royal Humdinger (SL-HUM-120Z)

IN CONTAINER, CNU-435/E
DL 1596AS260

CONTAINER DATA:

NUMBER OF MISSILES PER CONTAINER.....4
NUMBER OF FINS PER CONTAINER.....16
NUMBER OF WINGS PER CONTAINER.....16
LENGTH.....133.88
WIDTH.....36
HEIGHT.....19.68
STACKING HEIGHT.....18.5
NET WEIGHT.....500 LBS.
GROSS WEIGHT.....1,300 LBS.*
SHIPPING CUBE.....54.89 CU.FT.

*GROSS WEIGHT APPROXIMATE. VARIES ACCORDING TO NUMBER AND TYPE OF COMPONENTS LOADED.

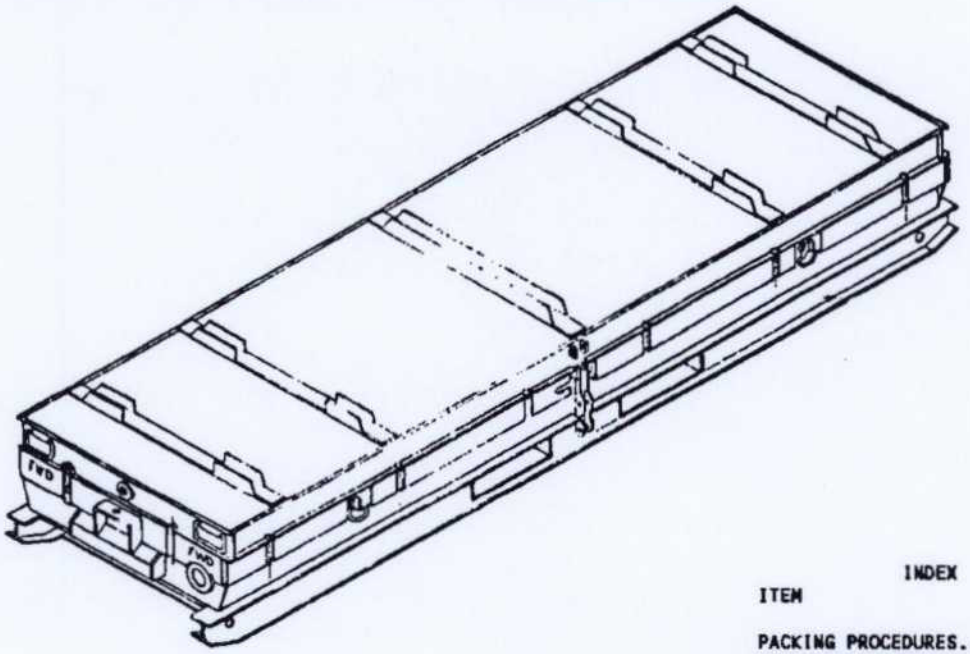

INDEX

ITEM PAGE

PACKING PROCEDURES.....2
UNPACKING PROCEDURES.....3
PACKING DETAILS.....4,5

REV	DESCRIPTION	TDA	SYSCMD	DATE	NAVAL AIR SYSTEMS COMMAND HEADQUARTERS APPROVAL
A	ODS AND SEAL REPLACEMENT			10/14/97	

REVISION APPROVAL

TECHNICAL DIRECTING ACTIVITY APPROVAL (Signature and date)

S/E. R. RINALDI 5/28/91

SIGNATURE TECHNICAL DIRECTION AGENT DATE

(Signature and date)

S/L. R. CARINGI 5/28/91

SIGNATURE NAVAIRSYSCMD, BY DIRECTION DATE

Tab 6

PACKING PROCEDURES

1. TRANSPORT CONTAINER, CNU-435/E TO PACKING AREA.

2. INSPECT CONTAINER FOR EVIDENCE OF DAMAGE WHICH MAY AFFECT FUNCTION.

CAUTION

CONTAINER MAY BE PRESSURIZED.

3. DEPRESS BUTTON ON PRESSURE RELIEF VALVE ON AFT END OF CONTAINER TO RELIEVE INTERNAL PRESSURE.

4. USING SCREWDRIVERS, UNLATCH THE 16 LATCHES RETAINING COVER.

5. USING TWO MEN, CAREFULLY REMOVE CONTAINER COVER AND SET ASIDE SEALING SURFACE UP.

6. INSPECT INTERIOR AND COMPONENTS OF CONTAINER FOR DAMAGE OR DEFECTS WHICH WOULD RENDER IT UNSERVICEABLE. PARTICULAR ATTENTION SHOULD BE GIVEN TO SEALING SURFACES OF COVER AND BASE. INSPECT FOR CLEANLINESS AND EVIDENCE OF MOISTURE. REMOVE ALL DIRT. IF MOISTURE IS PRESENT, REPLACEMENT OF HUMIDITY INDICATOR (ITEM 2) MAY BE REQUIRED. DO NOT USE CONTAINER UNTIL THOROUGHLY DRY.

7. LIFT THE FOUR TETHERED HOLDDOWN CUSHIONS AND SWING OUTBOARD OVER SIDE OF CONTAINER. ENSURE ALL CUSHIONS ARE CLEAN, DRY, AND NOT DAMAGED.

8. INSTALL 16 FINS INTO BOTH FIN CUSHION CASES AS SHOWN IN DETAIL A OF PACKING DETAILS.

9. INSTALL 16 WINGS INTO BOTH WING CUSHION ASSEMBLIES AS SHOWN IN DETAIL B OF PACKING DETAILS.

10. REPLACE THE FOUR TETHERED HOLDDOWN CUSHIONS.

WARNING

CONTAINER MUST BE GROUNDED DURING LOADING.

11. ATTACH EXTERNAL GROUND WIRE TO CONTAINER.

12. ATTACH HOISTING BEAM, HLU-270/E AND APPROPRIATE HOISTING EQUIPMENT TO MISSILE. RAISE AND POSITION MISSILE (AIM-9) ABOVE CONTAINER AS SHOWN IN PACKING DETAILS.

13. SLOWLY LOWER MISSILE INTO CONTAINER CUSHION ASSEMBLY.

14. REMOVE HOISTING BEAM, HLU-270/E FROM MISSILE.

15. REPEAT STEPS 12 THROUGH 15 FOR REMAINING MISSILES TO BE LOADED.

16. CLEAN CONTAINER GASKET WITH DRY CLEANING SOLVENT (ITEM 3).

17. REPLACE CONTAINER COVER. ENSURE PROPER ALIGNMENT OF COVER AND CONTAINER BASE.

18. USING TWO MEN, START AT DIAGONALLY OPPOSITE ENDS OF CONTAINER AND SECURE ALL 16 LATCHES.

NOTE

IF ANY LATCH APPEARS TO BE LOOSE OR TOO TIGHT, ADJUST LOCK NOT ON LATCH TO ACHIEVE APPROPRIATE TENSION.

19. ATTACH ANTI-PILFERAGE SEALS (ITEM 4) THROUGH HOLES PROVIDED AT DIAGONALLY OPPOSITE CORNERS OF THE CONTAINER.

20. REMOVE DESICCANT ACCESS COVER ON FORWARD END OF CONTAINER. REMOVE OLD DESICCANT IF PRESENT, AND INSTALL SIX 8-UNIT BAGS OF DESICCANT (ITEM 5) INTO DESICCANT BASKET. REPLACE ACCESS COVER.

21. INSERT MISSILE RECORDS INTO RECORD HOLDER. REPLACE RECORD HOLDER COVER AND INSTALL ANTI-PILFERAGE SEAL IF REQUIRED.

22. IN ADDITION TO ANY SPECIAL MARKINGS REQUIRED BY CONTRACT OR ORDER, MARK CONTAINER IN ACCORDANCE WITH MIL-STD-129.

UNPACKING PROCEDURES

1. USING APPROPRIATE HANDLING EQUIPMENT, TRANSPORT CONTAINER TO UNPACKING AREA.

WARNING

CONTAINER MUST BE GROUNDED DURING UNLOADING.

2. ATTACH GROUNDING STRAP TO CONTAINER.

3. INSPECT CONTAINER FOR DAMAGE THAT MAY HAVE AFFECTED CONTENTS. REPORT ANY EVIDENCE OF DAMAGE.

4. INSPECT ANTI-PILFERAGE SEALS (ITEM 4) ON CONTAINER COVER (TWO PLACES) AND RECORD HOLDER COVER FOR EVIDENCE OF TAMPERING. REPORT ANY EVIDENCE OF TAMPERING.

5. INSPECT HUMIDITY INDICATOR COLOR. BLUE COLORATION INDICATES CONTENTS ARE DRY, WHILE ANY PINK INDICATION REQUIRES THAT CONTENTS BE INSPECTED FOR MOISTURE INTRUSION. MOIST CONDITIONS MUST BE REPORTED.

CAUTION

CONTAINER MAY BE PRESSURIZED.

6. EQUALIZE INTERNAL PRESSURE BY DEPRESSING BUTTON ON PRESSURE RELIEF VALVE.

7. REMOVE ANTI-PILFERAGE SEALS FROM CONTAINER COVER AND RECORDS HOLDER COVER. REMOVE MISSILE RECORDS FROM RECORD HOLDER.

8. UNLATCH CONTAINER USING TWO MEN EQUIPPED WITH SCREWDRIVERS STARTING AT DIAGONALLY OPPOSITE ENDS OF THE CONTAINER.

9. USING TWO MEN, CAREFULLY REMOVE CONTAINER COVER AND SET ASIDE SEALING SURFACE UP.

10. ATTACH HLU-270/E HOISTING BEAM AND APPROPRIATE HOISTING EQUIPMENT TO MISSILE. CAREFULLY RAISE MISSILE CLEAR OF CONTAINER.

11. REPEAT STEP 10 FOR REMAINING MISSILES TO BE UNLOADED.

12. REPLACE CONTAINER COVER. ENSURE PROPER ALIGNMENT OF COVER AND CONTAINER BASE.

13. USING TWO MEN, START AT DIAGONALLY OPPOSITE ENDS OF CONTAINER AND SECURE 16 LATCHES.

NOTE

IF ANY LATCH APPEARS TO BE LOOSE OR TOO TIGHT, ADJUST LOCK NUT ON LATCH TO ACHIEVE APPROPRIATE ACTION.

14. IDENTIFY CONTAINER AS EMPTY BY EITHER STENCILING ON BOTH ENDS OR SIDES OF CONTAINER THE WORD "EMPTY" IN A MINIMUM OF 1-INCH HIGH LETTERING OR BY ATTACHING EMPTY LABEL (ITEM 6) TO EACH END OF CONTAINER.

15. REMOVE GROUNDING STRAP FROM CONTAINER AND MOVE CONTAINER TO STOWAGE AREA FOR REUSE.

REQ.	ITEM	DESCRIPTION	MAT'L	MAT'L SPEC
2	6	LABEL, EMPTY		LOCAL PROCUREMENT
6	5	DESICCANT		MIL-D-3464, TYPE II
2	4	SEAL, ANTI-PILFERAGE		FF-S-2738
		DRY CLEANING SOLVENT		P-D-680, TYPE II
1	2	HUMIDITY INDICATOR		6685-01-172-1248
1	1	CONTAINER, SHIPPING & STORAGE, CNU-435/E		DL 1596AS260

LIST OF MATERIALS

PACKING DETAILS

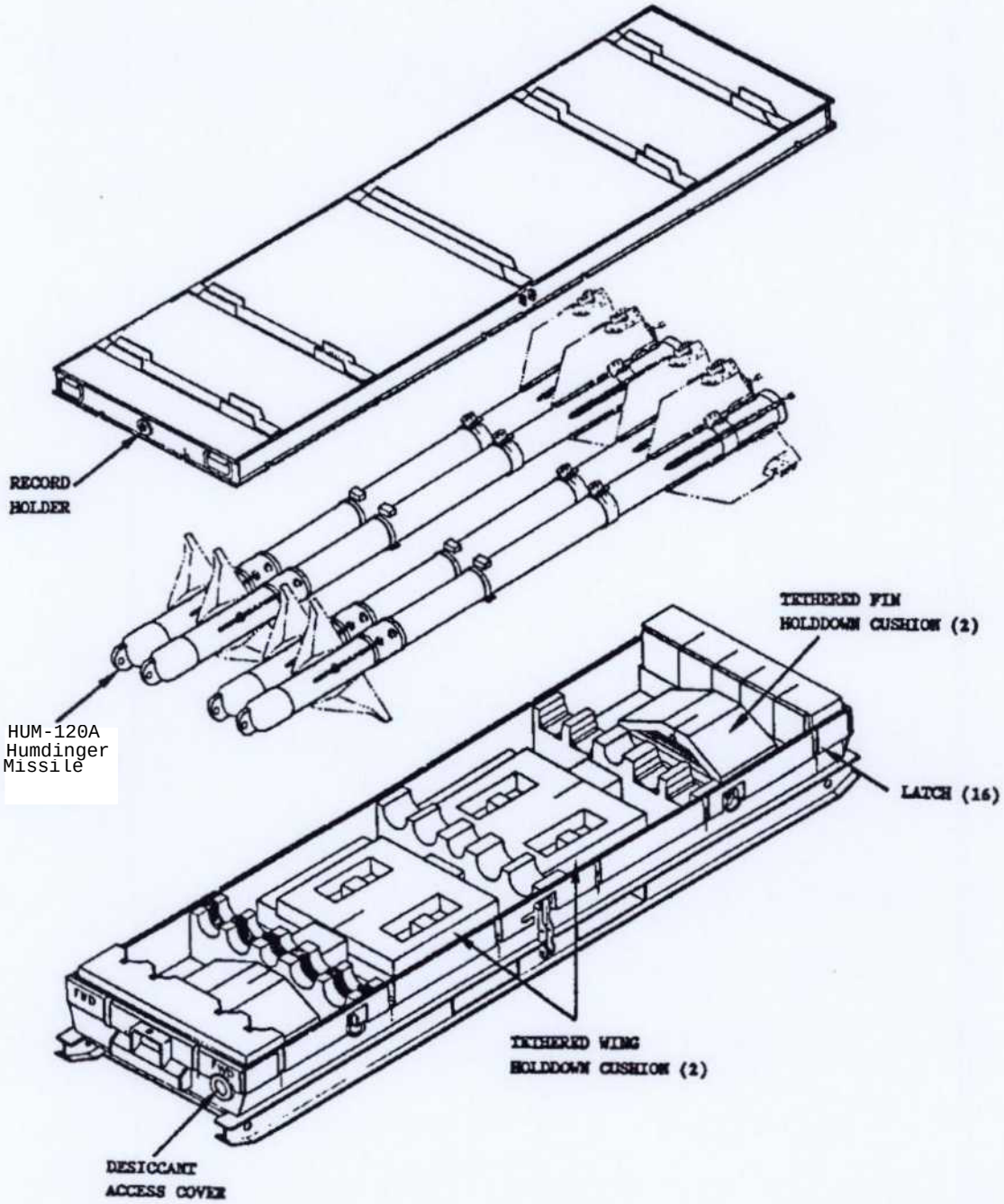

PACKING DETAILS

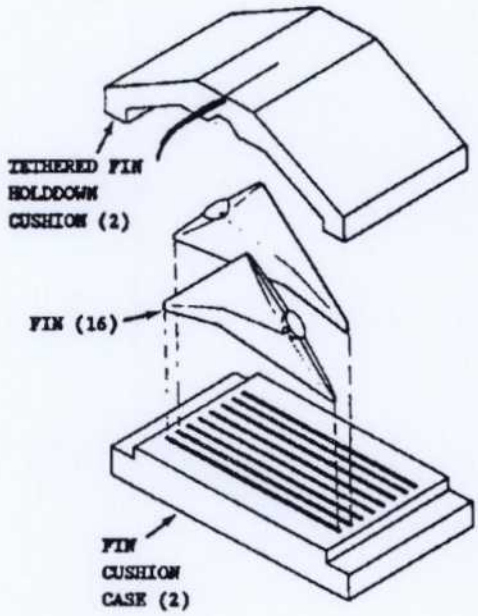

DETAIL A

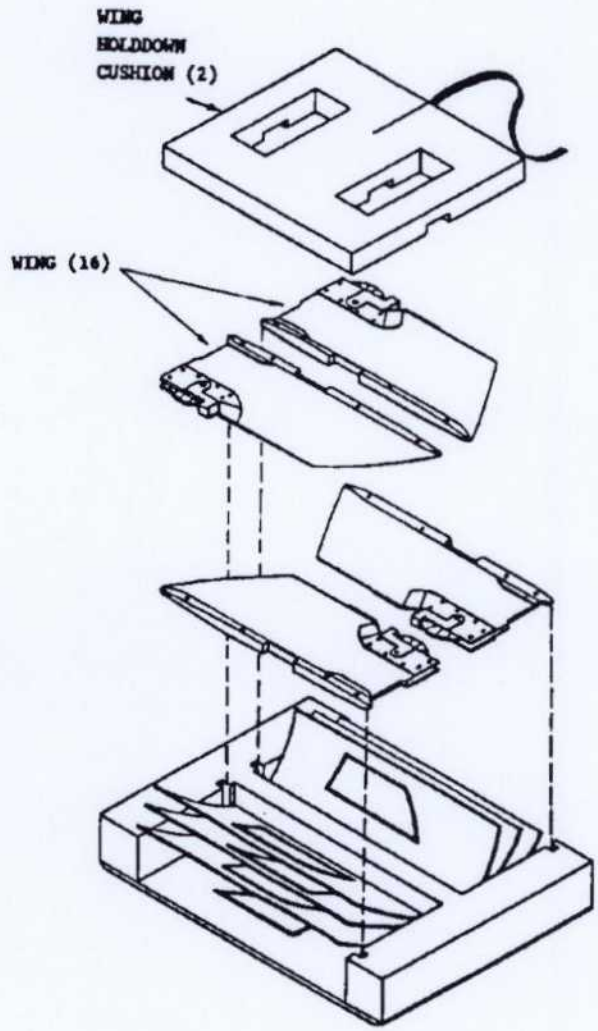

DETAIL B

Civil Aviation Authority of Bandaria
Karish Plaza 6
Peliar Zel BN-5838
Republic of Bandaria

Date

U.S. Department of Transportation
Pipeline Hazardous Materials Safety Administration
Office of Hazardous Materials Safety
Office of Hazardous Materials Special Permits and Approvals
1200 New Jersey Avenue, SE
East Building, 2nd Floor, PHH-32
Washington, DC 20590

To Whom It May Concern:

Transportation, handling, classification and packaging of the military hazardous material owned by the Government of Bandaria is beyond the competence of the Bandarian CA. The Bandarian Naval Forces possesses the exclusive competence in the aforementioned area and is responsible for observance of appropriate agreements, regulations and procedures.

Contact information is as follows:

Bandarian Forces information:
Tel:
Fax:
Email:

This request is submitted by NAME OF OFFICIAL, PHONE, E-MAIL, and OFFICE AND PHYSICAL ADDRESS.

Sincerely,

Tab 7

Appendix A

CAA electronic application instructions

http://www.phmsa.dot.gov/hazmat

PHMSA

Pipeline and Hazardous Materials Safety Administration

U.S. Department of Transportation

Contact Us | FAQs | Site Map

PHMSA Home | Pipeline Safety | Hazardous Materials Safety

Go | Advanced Search

DOT Distributes Over 2 Million New Hazardous Materials Emergency Guidebooks to Nation's First Responders

1 2 3 4 5

Hazmat News | Most Viewed Info | Safety Advisories

- PHMSA Continues Push to Clarify & Update Hazmat Rules
- 2011 Hazmat Penalty Action Report
- New and Improved Hazmat Registration Search tool
- Hazmat Harmonization Rule on Air Packaging Issued
- PHMSA seeks comment on transportation of lithium batteries
- PHMSA Proposes Updating Hazmat Rules to Better Balance Safety Standards and

Find PHMSA Offices

Key Officials

Regional Offices

Promoting Safety

How Do I Register? | Incident Reporting | Safe Travel | Outreach and Training

Stay Connected

Online Services | Interpretations | Hazardous Materials | Publications &

PHMSA/Hazmat Resources

Regulations & Rulemakings
PHMSA regulates and ensures the safe movement of hazardous materials.

Data & Reports
PHMSA tracks data on the frequency of failures, incidents and accidents.

Permits & Approvals
Various Permits links and topics.

Inspection & Enforcement
Determine compliance with the safety and training standards.

Engineering & Research
Provides scientific, engineering, and radiological expertise.

Preparedness & Response
PHMSA provides technical expertise to industry and works with the response community.

NTSB Recommendations
National Transportation Safety Board safety recommendations issued to PHMSA

HMEP Grants
Financial and technical assistance for hazardous

Done | Internet | Protected Mode: On | 100%

- About Us
- Calendar
- Contact Us
- Data & Statistics
- Electronic Services
- Field Operations
- Grants
- Hazardous Materials Information Center
- Incident Reporting
- International Standards
- Interpretations
- Library
- NTSB Safety Recommendations
- Registration
- Regulations
- Risk Management
- Safety Advisory Notices
- Security
- Special Permits & Approvals
- Training & Outreach

Home

About PHMSA
- Mission and Goals
- About the Agency
- Key Officials
- Organization
- Calendar

Promoting Safety & Security
- Regulations
- Special Permits & Approvals
- International Standards
- Security
- Initiatives

Encouraging

Home » Hazmat Safety Community » Regulations » Approvals & Permits

Approvals & Permits

The Pipeline and Hazardous Materials Safety Administration has the primary responsibility for the issuance of DOT special permits and approvals to the Hazardous Materials Regulations (HMR). A special permit or approval is a document which authorizes a person to perform a function that is not currently authorized under the authority of the HMR. Also, in many instances, the Regulations require approvals and/or registrations prior to transportation in commerce. Further information regarding the functions of the office and the similarities and differences between special permits and approvals are set forth below.

If you have any questions regarding the information contained below contact the Office of Hazardous Materials Approvals and Permits either by telephone 202-366-4535 or by **email form**.

Special Permits

Various Permit links and topics.

- New Requirements for Permit Applications
- Policy Statement Permits and Approvals Issued to Members of an Industry Association - May 4, 2010

Approvals

Note the data used to populate "Approval Search" is being reconfigured into a new document management system and as a result some of the data posted may be a few weeks out of date. We anticipate that the search feature will be up-to-date by mid-March. If you need information concerning application status that is not available in this search, please contact: PHMSA Approvals@dot.gov or call 202/366-3987. We apologize for any inconvenience.
(Note approved by the Office of Special Permits and Approvals)

- Approvals Search
- Approvals page
- Terminations

Approvals & Permits Safety Action Plan

- Approvals & Permits Safety Enhancement Project

Similarities and Differences

- Similarities and Differences of Permits and Approval Documents

The main difference between a permit and an approval

Approvals & Permits Safety Enhancement Project

Online Application for New Permits, Modifications and Approvals

NEW Online Application for Permit Renewals and Party Status Requests - provides faster processing/turnaround time, 24/7 access, immediate confirmation and tracking #, ability to attach supporting docs, and ease of submitting multiple applications!

Attention: Please note that there are commercial web sites offering to process Explosives or Fireworks Approval applications. These other sites appear similar to the sanctioned PHMSA website. However, unless you are accessing PHMSA's official On-Line Special Permit & Approval Application System at the following address: https://hazmatonline.phmsa.dot.gov/OnlineApprovals/pages/welcome.aspx, you are NOT filing an online Explosives or Fireworks application with PHMSA.

Approvals & Permits Menu

- **Approvals & Permits home**
- New Consumer Fireworks Safety Letter
- Permits
- Permits Search
- Permits List (no Grantee/Party To letters)
- Permits Notices
- Permits Notices Archive
- Permits Application Procedures and Compliance Responsibilities
- Approvals
- Suspensions & Terminations
- Process for Enabling New Technologies
- Contact Us

Sign Up for Updates

Click below to sign up to receive email notification of changes to

INFOCON: 3 UNCLASSIFIED

Online Approvals & Special Permits Application - Internet Explorer provided by USAF

https://hazmatonline.phmsa.dot.gov/Online%20Approvals/pages/welcome.aspx Certificate Error Bing

Favorites

Online Approvals & Special Permits Application Page

SPECIAL PERMITS and APPROVALS ONLINE

On-Line Special Permit & Approval Application System

Return to PHMSA Hazmat Home Page

On-Line Special Permit & Approval Application Process - provides faster processing/turnaround time, 24/7 access, immediate confirmation and tracking #, ability to attach supporting docs, and ease of submitting multiple applications!

The Pipeline and Hazardous Materials Safety Administration has the primary responsibility for the issuance of DOT Special Permits and Approvals to the Hazardous Materials Regulations (HMR). A Special Permit or Approval is a document which authorizes a person to perform a function that is not currently authorized under the authority of the HMR. Also, in many instances, the Regulations require approvals and/or registrations prior to transportation in commerce.

If you have any questions regarding this application, contact the Office of Hazardous Materials Special Permits and Approvals either by telephone (202) 366-4511 or by using the Contact Information for Special Permits and Approvals on our Contact Us Page at http://phmsa.dot.gov/hazmat/regs/contact.

Enter your email below and then click 'Enter' to start the application process.

Enter your email lcalrissian@bnafhq.bn.net

Re enter lcalrissian@bnafhq.bn.net

Enter email address, then click enter

Enter

ATTENTION FIREWORKS APPROVAL APPLICANTS!!! As of June 30, 2011 fireworks applications will only be accepted from the manufacturer or their designated U. S. Agent on their behalf as required by 49 CFR §105.40. See Federal Register Docket No. PHMSA-2010-0353: Notice 10-9, http://www.gpo.gov/fdsys/pkg/FR-2011-06-29/pdf/2011-15969.pdf.

You are accessing a U.S. Government information system, which includes this computer, the computer network on which it is connected, all other computers connected to this network, and all storage media connected to this computer or other computers on this network. This information system is provided for U.S Government use only.

Unauthorized or improper use of this information may result in disciplinary action, as well as civil and criminal penalties. By using this information system you consent to the following:

1) You have no reasonable expectation of privacy regarding any communications or data transiting this network or stored in this information system;
2) At any time, and for any lawful government purpose, the government may monitor, intercept, search and seize any communication or data transiting or stored on this information system; and
3) Any communication or data transiting or stored on this information system may be disclosed or used for any lawful government purpose.

SPECIAL PERMITS and APPROVALS ONLINE

On-Line Special Permit & Approval Application System

Return to PHMSA Hazmat Home Page

Home | Search | New | Go to Queue | **0 applications in queue**

FAQ
Glossary

Please follow the instructions provided in order to expedite the application process. Either an approval application or a special permit application can be filed from this website. Applications can be new and/or a renewal/modification of an existing application. We appreciate your patience and are happy to be provided feedback on your user experience.

In order to create a new application, please use one of the following options.

1. Create a new application. Select 'New' from the menu. Select the type of application, fill out the application and then submit it.

2. Search for an existing application, copy it to the queue and then create a new application based off of the existing application. If you choose this option, you can select up to 20 pre-existing applications at a time.

3. If you already know the tracking number of an existing application, you can enter it here.

- (●) Approval
- ( ) Special Permit

Select "Approval", then select "New" in tool bar above.

Tracking Number [ ] Quick Search

Step 2

Application Queue

0 applications are currently selected in your queue.

Clicking 'Empty Queue' will remove all applications currently stored in the queue. Use caution before clicking this button. Empty Queue

User Summary

The following information will be used by default on applications you submit. You may override these default values when filling in an application.

Company
Title
Last Name
First Name
Position
Address
Address 2
City
State
Postal Code
Country
Phone

SPECIAL PERMITS and APPROVALS ONLINE

On-Line Special Permit & Approval Application System

Return to PHMSA Hazmat Home Page

Home | Search | New | Go to Queue **0 applications in queue**

FAQ
Glossary

This screen provides you the ability to start a new Approval, Special Permit or Special Permit Party Status application.

Use the following instructions to create a new application.

1. Choose a type of application to create (Approval, Special Permit or Special Permit Party Status).

2. Choose the Special Permit Party Status value when you have a requirement to become a "Party To" an existing Special Permit. This selection will require you to already know the Special Permit number. You will be asked to enter the special permit number when completing the application.

Type Approval [Create New]

Select "Approval" from drop down, then click "Create New"

User Summary

The following information will be used by default on applications you submit. You may override these default values when filling in an application.

Company
Title
Last Name
First Name
Position
Address
Address 2
City
State
Postal Code
Country
Phone
Fax
Email

If you have any questions regarding this application, contact the Office of Hazardous Materials Special Permits and Approvals either by telephone (202) 366-4511 or by email form

U. S. Department of Transportation | 1200 New Jersey Avenue, SE | Washington, DC 20590 | (202) 366-4000

Step 3

INFOCON: 3 UNCLASSIFIED

Online Approvals & Special Permits Application - Internet Explorer provided by USAF

https://hazmatonline.phmsa.dot.gov/Online%20Approvals/pages/approval.aspx Certificate Error

Favorites

Online Approvals & Special Permits Application

SPECIAL PERMITS and APPROVALS ONLINE

On-Line Special Permit & Approval Application System

Return to PHMSA Hazmat Home Page

Home Search New Go to Queue **0 applications in queue**

FAQ
Glossary

Explosives Application

Previous Next Save

* Indicates Required

Select "Explosives" and "Military" from the respective drop down blocks. Note: Work at this point may be saved by clicking the disc in the tool bar above.

Approval Type * Explosives

Request Type Military

Please provide a brief description summarizing what is being requested in your application for an Approval. Refer to 49 CFR 107.705(b)(1).

Application Summary * Request for FMS EX approval for Missile, Royal Humdinger II, UN0181, Rockets,

Type in a brief statement as to what you are requesting, such as EX approval. Also identify the commodity for which you are requesting the EX approval.

Application Date 07-06-2012

User Summary

The following information will be used by default on applications you submit. You may override these default values when filling in an application.

Company
Title
Last Name
First Name
Position
Address
Address 2
City
State
Postal Code
Country
Phone
Fax
Email

Step 4

INFOCON: 3 UNCLASSIFIED FPCON: Alpha

Online Approvals & Special Permits Application - Internet Explorer provided by USAF

https://hazmatonline.phmsa.dot.gov/Online%20Approvals/pages/approval.aspx

Certificate Error

Favorites

PHMSA Login | Online Approvals & Sp...

Page Safety Tools

SPECIAL PERMITS and APPROVALS ONLINE

On-Line Special Permit & Approval Application System

Return to PHMSA Hazmat Home Page

Home Search New Go to Queue **0 applications in queue**

FAQ
Glossary

Explosives Application

Previous Next Save

* Indicates Required

Company	*	Bandarian Land Forces
Title	*	Mr.
Position	*	Transportation Specialist
First Name	*	Lando
Last Name	*	Calrissian
Address	*	Materiel Division
Address 2		Infantry Battalion C3PO
Country	*	Bandaria
Postal Code		5300
City	*	Karish
State		Kuna District
Phone	*	7079998555
Additional Phone		7079995554
Fax		7079995553
Fax (confirm)		7079995553
Email	*	lcalrissian@bnafhq.bn.net
International Phone		lcalrissian@bnafhq.bn.net
International Fax		70799955543055
International Fax (confirm)		70799955543055

User Summary

The following information will be used by default on applications you submit. You may override these default values when filling in an application.

Company
Title
Last Name
First Name
Position
Address
Address 2
City
State
Postal Code
Country
Phone
Fax
Email

The user information can be the purchaser's embassy in the U.S., or it can be a government address in the purchaser's country. Ensure all items with an asterisk (*) are completed.

Step 5

If you have any questions regarding this application, contact the Office of Hazardous Materials Special Permits and Approvals either by telephone (202) 366-4511 or by email form

SPECIAL PERMITS and APPROVALS ONLINE

On-Line Special Permit & Approval Application System

Return to PHMSA Hazmat Home Page

Home | Search | New | Go to Queue | 0 applications in queue

FAQ
Glossary

Explosives Application

Previous | Next | Save

* Indicates Required

Approval Hazardous Material Information

For Fireworks, Explosives and Competent Authorities (as applicable), please provide the Product Name / Description. For all other requests, enter the approval type (i.e. M Number, Visual or Requalifier).

Product Name / Product Description *

Propulsion Steering Section, Rocket Motor, 1.3C

List the product name/description.

For Fireworks Approvals only, use APA Standard 87-1 as the Affected Regulation.

Affected Regulations *

49 CFR 173.56

Enter 49 CFR 173.56

☑ UN Number / Proper Shipping Name N/A

In order to add a hazardous material to this application you must either select an item in the 'Proper Shipping Name' or 'UN Number' dropdown and then select 'Add Material'.

Proper Shipping Name: Rocket motors — Add Material

UN Number: UN0186 — Add Material

Proper shipping name and UN number may be obtained from Tab 5 JHCS printout or from the CAA letter provided to you.

Lab Report Number

Lab Report Number is not required.

Transportation Modes

- ☑ Motor Vehicle
- ☑ Cargo Air
- ☐ Passenger Air
- ☐ Rail Freight
- ☑ Cargo Vessel
- ☐ Ferry Vessel

Click on the transportation modes that may be used for this shipment

User Summary

The following information will be used by default on applications you submit. You may override these default values when filling in an application.

Company
Title
Last Name
First Name
Position
Address
Address 2
City
State
Postal Code
Country
Phone
Fax
Email

Step 6

If you have any questions regarding this application, contact the Office of Hazardous Materials Special Permits and Approvals either by telephone (202) 366-4511 or by email form

INFOCON: 3 UNCLASSIFIED

Online Approvals & Special Permits Application - Internet Explorer provided by USAF

https://hazmatonline.phmsa.dot.gov/Online%20Approvals/pages/approval.aspx Certificate Error

Favorites

Online Approvals & Special Permits Application

SPECIAL PERMITS and APPROVALS ONLINE

On-Line Special Permit & Approval Application System

Return to PHMSA Hazmat Home Page

Home Search New Go to Queue **0 applications in queue**

FAQ
Glossary

Explosives Application

Previous Next Save

Click "next" for this screen

* Indicates Required

☐ Facility/Manufacturer Address is different?

For a manufacturing/facility Approval, a statement of the name and street address of each facility where manufacturing under the Approval will occur.

User Summary

The following information will be used by default on applications you submit. You may override these default values when filling in an application.

Company
Title
Last Name
First Name
Position
Address
Address 2
City
State
Postal Code
Country
Phone
Fax
Email

Step 7

INFOCON: 3 UNCLASSIFIED FPCON: Alpha

Online Approvals & Special Permits Application - Internet Explorer provided by USAF

https://hazmatonline.phmsa.dot.gov/Online%20Approvals/pages/approval.aspx Certificate Error Bing

Favorites

Online Approvals & Special Permits Application Page Safety Tools

SPECIAL PERMITS and APPROVALS ONLINE

On-Line Special Permit & Approval Application System

Return to PHMSA Hazmat Home Page

Home Search New Go to Queue **0 applications in queue**

FAQ
Glossary

Explosives Application

Previous Next Save

* Indicates Required

☑ Consultant?

If the applicant is not a resident of the United States, the following information is required for the purpose of a designation of agent for service in accordance with §105.40.

Consultant Information

Consultant Company	*	Bandarian Embassy
Consultant Name	*	Han Solo
Consultant Address	*	Embassy of Bandaria
Consultant Address 2		2468 16th Street NW
Consultant Country	*	United States
Consultant Postal Code	*	20008
Consultant City	*	Washington
Consultant State	*	DC
Consultant Phone	*	2025556789
Consultant Fax		2025555551
Consultant Fax (confirm)		2025555551
Consultant Email	*	han.solo@mil.bn
Consultant Email (confirm)		han.solo@mil.bn

User Summary

The following information will be used by default on applications you submit. You may override these default values when filling in an application.

Company
Title
Last Name
First Name
Position
Address
Address 2
City
State
Postal Code
Country
Phone
Fax
Email

If you have any questions regarding this application, contact the Office of Hazardous Materials Special Permits and Approvals either by telephone (202) 366-4511 or by email form

U. S. Department of Transportation | 1200 New Jersey Avenue, SE | Washington, DC 20590 | (202) 366-4000

Select "consultant." This would be your designated agent in the U.S. Typically this is someone at your embassy or a liaison officer at your freight forwarder that can answer questions from the DoT concerning this EX request. This would also be the same person you designate on Tab 7 of the EX package.

Step 8

INFOCON: 3 UNCLASSIFIED FPCON: Alpha

Online Approvals & Special Permits Application - Internet Explorer provided by USAF

https://hazmatonline.phmsa.dot.gov/Online%20Approvals/pages/approval.aspx

Certificate Error

Favorites

Online Approvals & Special Permits Application

Page Safety Tools

SPECIAL PERMITS and APPROVALS ONLINE

On-Line Special Permit & Approval Application System

Return to PHMSA Hazmat Home Page

Home Search New Go to Queue **0 applications in queue**

FAQ
Glossary

Explosives Application

Previous Next Save

* Indicates Required

Use the following instructions to add attachments.

Please ensure you attach the additional supporting information and documentation as required by Title 49 CFR 107.105 , 107.107 , 107.109 , and 107.117 , for Special Permits (i.e, Analysis demonstrating equivalent level of safety, drawings, for manufacturing Special Permits the name and address of each facility where manufacturing will occur, etc.) and 107.705 , 107.805 , 107.807 for Approvals (i.e., as applicable Material Composition, Thermal Analysis, Manufacture Information, chemical analysis, etc.)

1. Please save your documents with a meaningful name such as Packaging Lab Report 1234 or Engineering Drawing 1234 rev C, etc. before attaching documents. The file name attached will be used for future retrieval.
2. Select browse.
3. Navigate to the file that you want to attach.
4. Select the file, then select 'Open'.
5. Provide a document title.
6. Select the 'Attach Document' button. (10 MB maximum per attachment)
7. To attach additional documents, repeat this process starting with step 1.

Allowed file formats (PDF, DOC, XLS, PPT, PPS, GIF, JPG, BMP, TXT, RTF)

Browse...

Title

Attach Document

	File	Title
(delete)	CAA Package.pdf	

Step 9

User Summary

The following information will be used by default on applications you submit. You may override these default values when filling in an application.

Company
Title
Last Name
First Name
Position
Address
Address 2
City
State
Postal Code
Country
Phone
Fax
Email

Attach the documents of your EX package. Each document must be loaded separately with a Title attached to it from the drop down menu.

If you have any questions regarding this application, contact the Office of Hazardous Materials Special Permits and Approvals either by telephone (202) 366-4511 or by email form

U. S. Department of Transportation | 1200 New Jersey Avenue, SE | Washington, DC 20590 | (202) 366-4000

Internet | Protected Mode: On 100%

INFOCON: 3 UNCLASSIFIED

Online Approvals & Special Permits Application - Internet Explorer provided by USAF

https://hazmatonline.phmsa.dot.gov/Online%20Approvals/pages/approval.aspx Certificate Error

Favorites

Online Approvals & Special Permits Application

SPECIAL PERMITS and APPROVALS ONLINE

On-Line Special Permit & Approval Application System

Return to PHMSA Hazmat Home Page

Home Search New Go to Queue **0 applications in queue**

FAQ
Glossary

Explosives Application

Previous Next Save

Save your application, print it, and submit. Note: The DoT should assign a tracking number to the application within 7 days after submission.

* Indicates Required

Final Step

Print Application

When you are ready click the submit button here

User Summary

The following information will be used by default on applications you submit. You may override these default values when filling in an application.

Company
Title
Last Name
First Name
Position
Address
Address 2
City
State
Postal Code
Country
Phone
Fax
Email

Step 10

INFOCON: 3 UNCLASSIFIED

Print Application - Internet Explorer provided by USAF

https://hazmatonline.phmsa.dot.gov/Online%20Approvals/pages/printapplication.aspx Certificate Error Bing

Favorites

Print Application

Print Application

SPECIAL PERMITS and APPROVALS ONLINE

New Application

Embassy of Bandaria
Manager
Mr. Han Solo
Embassy of Bandaria
2468 16th Street NW
Washington, DC 20008
United States
Phone: 2025556789
Fax: 2025555551
Email: han.solo@mil.bn

Explosives
Military
Emergency? No
Description:
Summary: Request for FMS EX approval for Missile, Royal Humdinger II, UN0181, Rockets, 1.1E from Bandaria to Jacksonville, FL for motor overhaul
Date: 2012-07-06

Facility Information

Consultant Information

Bandarian Embassy
Han Solo
Embassy of Bandaria
2468 16th Street NW
Washington, DC 20008
United States
Phone: 2025556789
Fax: 2025555551
Email: han.solo@mil.bn

This is an example of a printed application.

Hazardous Materials

Rocket Motor, 1.3C
49 CFR 173.56

----- Transportation Modes -----
Motor Vehicle Yes
Cargo Air Yes
Passenger Air No
Rail Freight No
Cargo Vessel Yes
Ferry Vessel No

INFOCON: 3 UNCLASSIFIED FPCON: Alpha

PHMSA - Approvals Search - Internet Explorer provided by USAF

http://prod-web1.phmsa.dot.gov/hazmat/regs/sp-a/approvals/search

PHMSA - Approvals Search

PHMSA
U.S. Department of Transportation
Pipeline and Hazardous Materials
Safety Administration

Careers | Contact Us | FAQs | Site Map

Go

Advanced Search

For the Public | Hazmat Safety Community | Pipeline Safety Community | Media | Congress | Doing Business with PHMSA

Home » Hazmat Safety Community » Regulations » Special Permits & Approvals » Approvals » Approvals Search

Approvals Search

Approval Number:		Tracking Number:	
Company Name:		Expiration Date:	Start:
Product Designation P/N:			End:
UN Number:		Proper Shipping Name (PSN):	
Hazard Class:		Packaging Note:	
Status:		State:	
Number of Results:	Display 50 results per page	Search	clear all fields

You can track your EX request by entering the tracking number provided by DoT after the initial request was submitted . You can also obtain status on all your EX requests by entering the company name listed in Step 5.